R-3W*MT-LMH

* Part numbers reflected
R-3WMT-LMH
R-3WAMT-LMH
R-3WSMT-LMH
R-3W2MT-LMH

PANEL KNOCKOUT

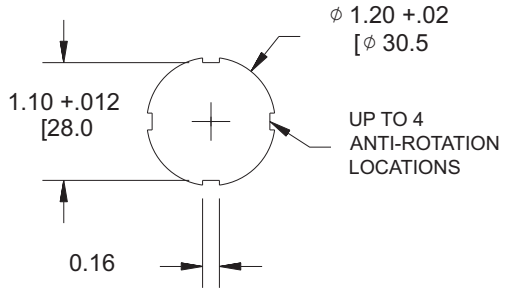

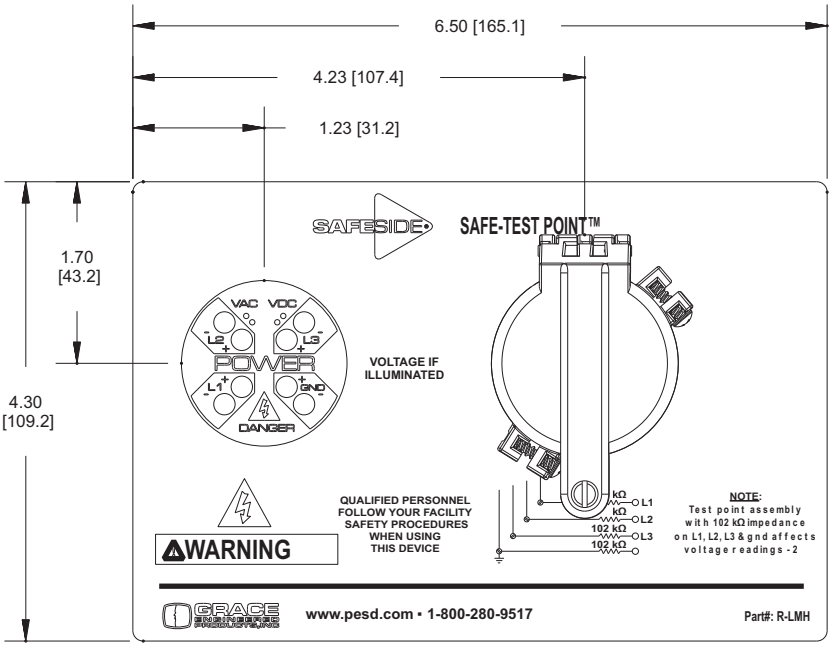

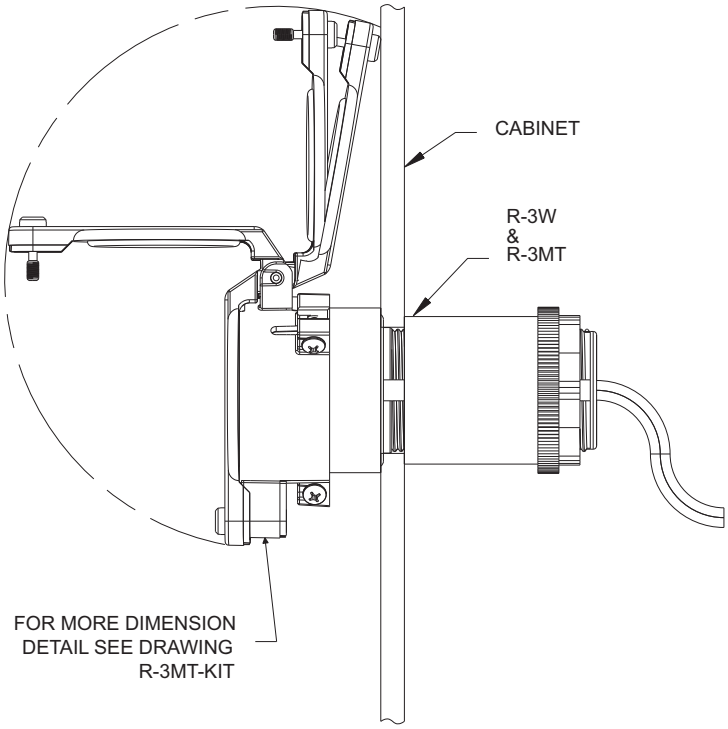

NOTE:

1)REFER TO INSTALLATION INSTRUCTIONS FOR PROPER INSTALLATION.
2)ALWAYS FOLLOW LOCAL ELECTRICAL CODES.
3)FOR DETAILED SPECIFICATIONS SEE DATA SHEETS THAT APPLY.

Warning: Verify an electrical conductor has been de-energized using an adequately rated test equipment before working on it. Follow appropriate Energy Control (Lockout/Tagout) procedures as per OSHA Subpart S; the current edition of NFPA 70E; and the current edition of CSA Z462.

GracePort(R) and SafeSide(R) are Registered Trademarks of Grace Engineered Products, Inc. Property of Grace Engineered Products, Inc. (Drawings are subject to change without notification)